NEW PRODUCT INFORMATION

AWS815 Air & Water Hose Reel

November 2021

The Alemlube AWS815 steel body Air and Water Hose Reel has been designed and manufactured in Italy to withstand regular and robust use and is thus ideal for all heavy duty and industrial applications and is now supplied complete with 15m x 8mm ID hose.

The key feature of the AWS815 is its compact size where it is particularly suitable for installation in small & restricted spaces where most other hose reels cannot fit.

Featuring moulded steel and electrostatically painted covers that are UV resistant, a 15m x 8mm ID reinforced polyurethane hose and a 2 way roller guide assembly, the AWS815 automatically rewinds the hose and can be stopped at any desired hose length to suit individual requirements.

The AWS815 incorporates a swivelling bracket that can be wall or ceiling mounted allowing the reel to swing through 180°.

NOTE: *Rotation of 180° is possible only when the hose reel is mounted onto a pillar with a maximum width of 200-240mm or to a wall corner.*

SPECIFICATIONS, FEATURES AND BENEFITS

- Compact in size
- Robust moulded all steel construction
- Suitable for underground coal mine applications
- Maximum working pressure of 290psi (20bar)
- 3/8" BSP (f) inlet and 1/4" (m) outlet
- Supplied complete with 15m x 8mm ID polyurethane hose
- Mounting bracket allows 180° hose reel rotation
- Automatic hose retraction can be stopped at any length
- Wall or ceiling mountable
- Weight of 7kg

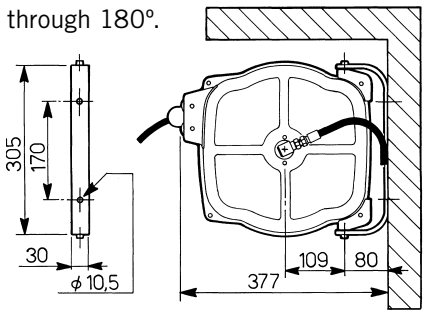

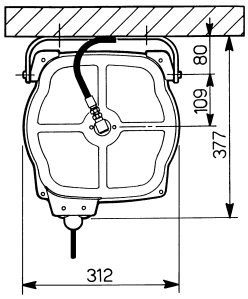

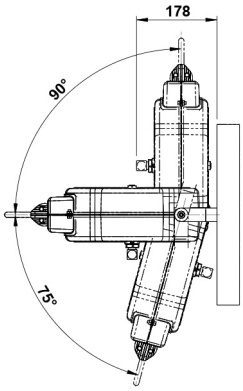

2 YEAR WARRANTY